Toilet

American Standard

CL22305-6DACTCB

IDS Clear

IDS Clear CC 3/4.5L CBR Top push set.WT

STYLE SEGMENT

- Traditional

KEY SPECIFICATIONS

- Product Dimensions: 454x770x725
- Installation Type: Floor Standing
- Flushing System: Washdown
- Flushing Platform: Washdown
- Flushing Type: Dual flush
- Flushing Volume: 4.5/3
- Trapway: S Trap
- Rough In: 305
- Trapway Design: Fully Skirted
- Bowl Shape: Elongated
- Water Pressure, Dynamic (MPa): 18-19 psi
- Water Pressure, Static (MPa): 20 psi
- Material: Vitreous China
- Color Availability: White Heat II



SHIPPING WEIGHT

- Net Weight: 74.36
- Gross Weight: 75.36

KEY TECHNOLOGIES AND FEATURES

HYGIENE

- Complies with American Standard Quality Standards

COMFORT

- Complies with American Standard Quality Standards

CONVENIENCE

- Complies with American Standard Quality Standards

DURABILITY

- Complies with American Standard Quality Standards

SUSTAINABILITY

- Complies with American Standard Quality Standards

SAFETY

- Complies with American Standard Quality Standards

OTHERS

- NIL

STANDARDS AND CERTIFICATIONS

- TIS 792-2554(2011)

American Standard

CL22305-6DACTCB

IDS Clear

IDS Clear CC 3/4.5L CBR Top push set.WT

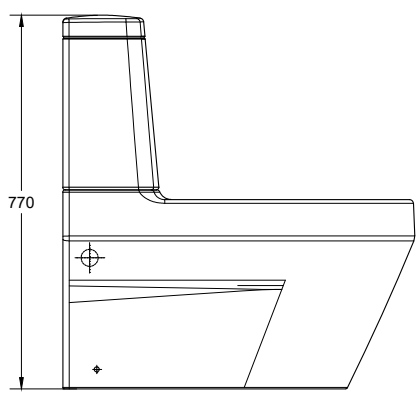

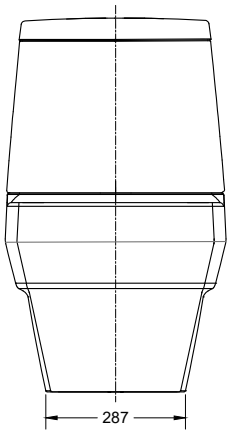

FRONT VIEW

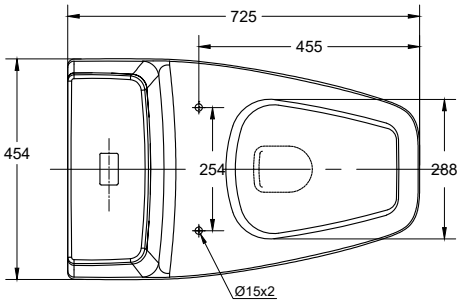

American Standard

CL22305-6DACTCB

IDS Clear

IDS Clear CC 3/4.5L CBR Top push set.WT

Item	Description	IDS Clear CC 3/4.5L CBR Top push set.WT
Dimensions	Product (mm)	454x770x725
Material & Color	Material	Vitreous China
	Color	White Heat II
Bowl	Shape	Elongated
Trapway	Type	S Trap
	Rough-in (mm)	305
	Design	Fully Skirted
Flushing	System	Washdown
	Type	Dual flush
	Platform	Washdown
	Volume	4.5/3
Water Pressure	Dynamic (MPa)	18-19 psi
	Static (MPa)	20 psi
Installation	Type	Floor Standing

Toilet

American Standard

CL22305-6DACTCB

IDS Clear

IDS Clear CC 3/4.5L CBR Top push set.WT

Components	Toliet Seat Included	Yes

Shipping	Net Weight (kg)	74.36
	Gross Weight (kg)	75.36
	Product Weight (kg)	62.66
	Dimensions (mm)	550x1000x520